TRAILER VACUUM BRAKING EQUIPMENT

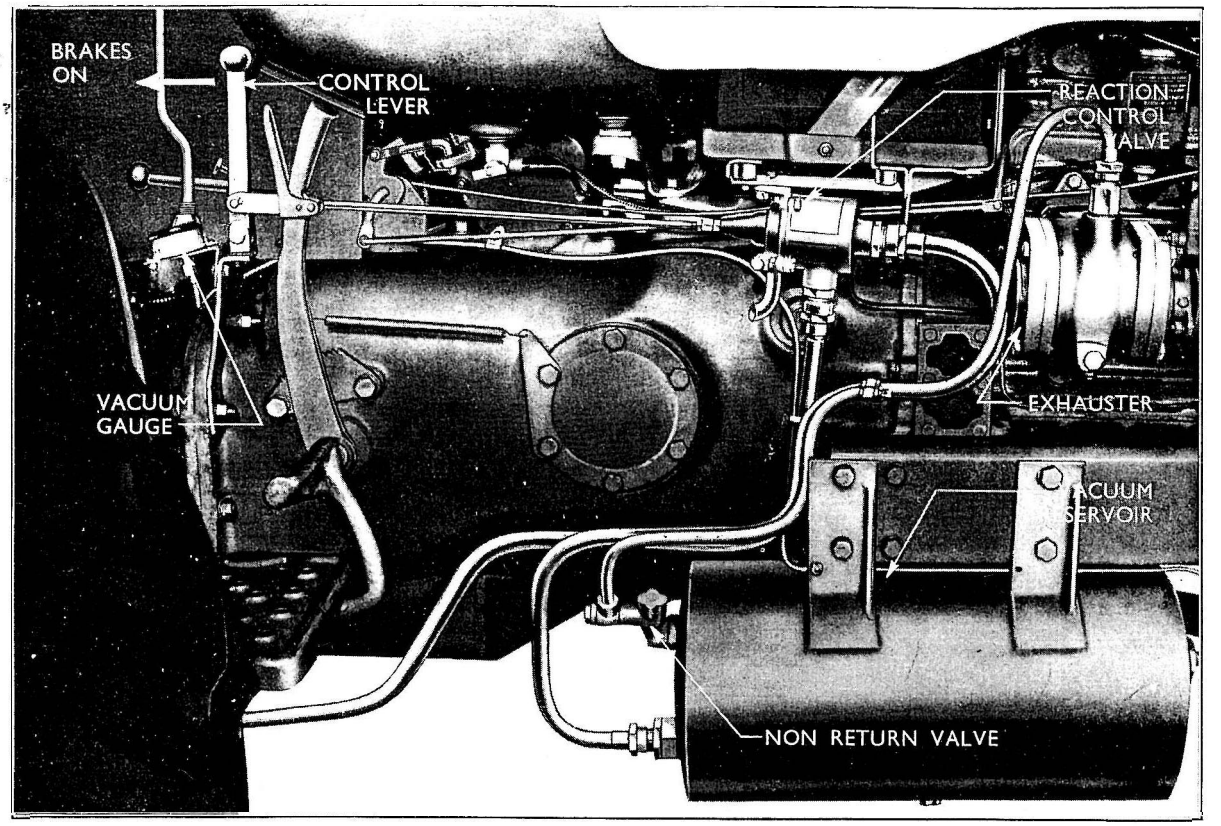

Fig. 1
Vacuum Braking Equipment

Vacuum. braking equipment can be fitted in production, on request, to all Fordson Major Diesel Agricultural and Commercial Tractors or supplied as an accessory kit under Part No. E60–Z–9.

The kit comprises a rotary exhauster, vacuum reservoir, reaction valve, control lever, vacuum gauge, quickly detachable coupling and the necessary connecting pipes and brackets. To install this equipment it is necessary to modify the fuel injection pump by fitting a new cambox and camshaft to enable the exhauster to be driven from the rear of the camshaft. The parts necessary for the modification of the fuel injection pump are also included in the kit.

The rotary exhauster is mounted behind the fuel injection pump and driven at half engine speed by the pump camshaft. It consists of a body in which a rotor is supported by heavy duty ball bearings. The rotor has six sliding vanes or plates, which are held in contact with the internal bore of the body by cam rings. The ends of the bore of the body for the rotor are sealed by spring-loaded plates which bear against the ends of the rotor vanes, a seal being made between the end plates and the internal bore by piston rings.

The method of operation of the rotary exhauster is as follows :—

The rotor is supported eccentric to the internal bore of the body, being closer to the body at the bottom than at the top. The vanes and end sealing plates make six separate compartments and as the rotor is supported eccentric to the internal bore, these compartments will be of a larger volume towards the top of the exhauster than at the bottom.

As the rotor commences to rotate in a clockwise direction, when viewed from the front of the engine, so the sliding vanes will move in and out of the rotor as their position moves from bottom to top of the exhauster body. Air is drawn from the vacuum reservoir, into the exhauster body at the point where the compartments are increasing in size, and expelled through the outlet (on the side where the compartments are decreasing) into the engine sump. The intake and outlet pressures of the air will obviously vary depending on the amount of vacuum existing in the reservoir at any time.

A spring-loaded ball valve is fitted between the inlet and outlet passages of the exhauster, to prevent the exhauster being overloaded. This valve opens, when the vacuum in the reservoir exceeds 25 ins. (63.5 cm.) of mercury, to permit air from the engine sump to circulate through the exhauster back into the engine sump thus by-passing the vacuum reservoir. At this time a non-return valve in the vacuum reservoir drops back on to its seat and prevents air from entering the vacuum reservoir.

The vacuum reservoir tank is 20 ins. long × 10 ins. diameter with a total capacity of 1,570 cubic inches. This provides sufficient capacity to meet the requirements of any suitably equipped trailer up to 10-tons gross, and will provide for several brake applications with the engine stopped.

The exhauster is connected to the reservoir tank through a non-return valve which allows air to be drawn off. A gauze filter is also incorporated in the non-return valve to prevent dirt or foreign matter from being drawn into the exhauster.

The reaction control valve assembly consists of a cylinder having connecting ports to trailer brake cylinders and vacuum reservoir, and also a vent to atmosphere. Operating in the cylinder is a piston having at its centre a combined valve assembly which acts at its rearward end as an atmospheric valve and at its forward end as a vacuum valve.

The piston is spring loaded and directly connected to the operating lever through the medium of a control rod, extension rod and fork (see Figs. 1 and 2).

In the normal "brakes off" position (Fig. 2) the return spring holds the piston fully forward in the cylinder, the vacuum end of the combined valve being held firmly on its seat by the vacuum spring plus the pull from the vacuum reservoir. With the piston in this position the length of the combined valve is such that the rear end is clear of the seat, thus the forward portion of the reaction valve cylinder and also the trailer brake cylinders, are vented to the atmosphere.

When the driver's hand lever is operated, movement is transmitted to the piston assembly pulling it rearward against the return spring. Initial movement first closes the atmospheric end of the combined valve, the vacuum end remaining seated, but continuing movement opens the vacuum end while still sealing the atmospheric end (Fig. 2). Air is drawn from the forward part of the reaction valve cylinder and from the trailer brake cylinders into the vacuum reservoir, and brake application commences.

A small spring is fitted between the end of the control rod extension and the operating lever connecting fork (see inset Fig. 1). This allows small fluctuations of the piston assembly independent of the operating lever. When the combined valve opens at the vacuum end a depression is formed in the forward part of the reaction valve cylinder, tending to draw the piston forward against the control rod extension spring in proportion to the depression. Thus, in order to obtain heavier braking power the combined valve must be moved further off its seat at the vacuum end and the effort at the operating lever to achieve such movement is progressively increased in proportion to the depression in the forward part of the cylinder.

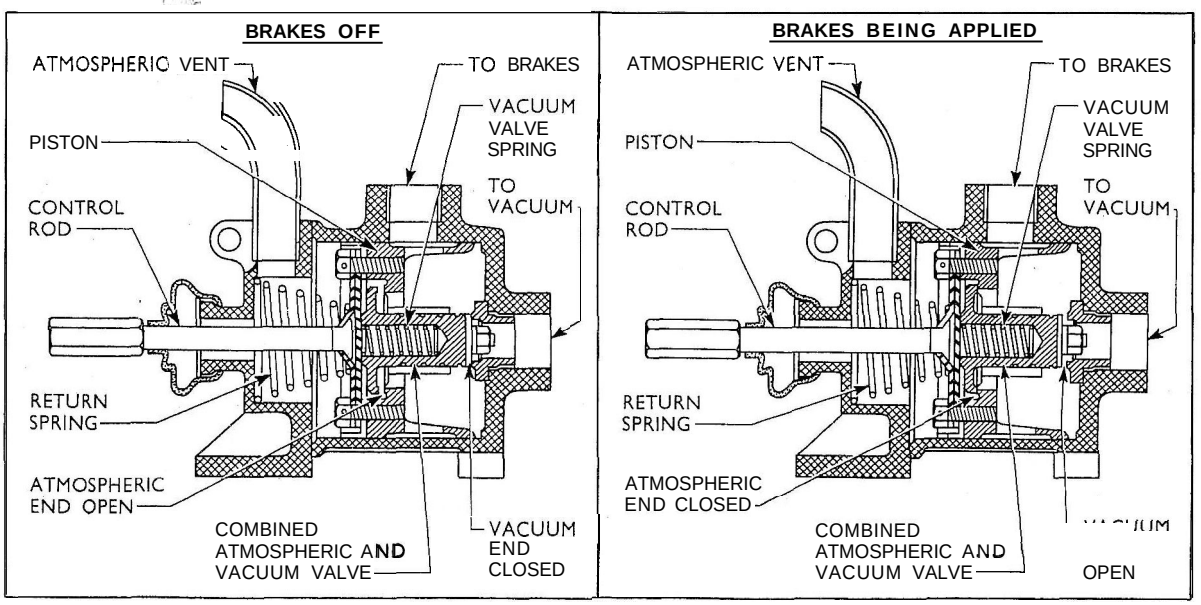

Fig. 2
Operation of Reaction Valve

This characteristic provides the operator with a "sense of feel" enabling him to apply the trailer brakes with perfect control and absolute safety.

Should it be desired to partially apply the brakes and hold them in a definite position, the piston will move forward against the control rod extension spring until a position of balance is achieved, when both the armospheric end and the vacuum end of the valve will be seated : the depression in the reaction valve cylinder and the trailer brake cylinders being proportional to the pull on the operating lever.

Any decrease in pull on the operating lever during brake application allows the piston return spring to move the piston further forward, opening the atmospheric end of the combined valve and reducing the depression in the reaction valve cylinder and the trailer brake cylinders, until such time as pull on the operating lever is either again held or increased.

It will be seen that the degree of vacuum applied to the trailer brake cylinders is always proportional to the effort applied to the hand lever.

The quick detachable coupling used is the standard type of unit in general use and provides a simple and speedy method of connecting the trailer brake system. The male portion is the part of the trailer equipment fitted on the end of the trailer flexible connection hose. A dummy plug is provided with the coupling and should always be inserted as the trailer hose is disconnected, to prevent dirt entering the coupling,

Should the trailed vehicle accidentally break away, the coupling will then be released so that no damage can be done to the trailer hose connection.

If a pull of 85 lbs. (38.855 kg.) or more is put on the coupling it will then disconnect.

Periodic Attentions

As a certain amount of condensation will collect in the vacuum reservoir tank, the drain plug should be removed every *200* hours to allow this accumulation of water to drain off.

It is advisable that pipe connections be checked and tightened at *200* hour intervals to ensure that no leak can occur.

Ensure that the leather gaiter on the control valve is intact as this prevents dirt from entering the valve when the brakes are released.

The rubber washer fitted to the coupling should be examined in case of it having become damaged or perished.

Lubrication

Exhauster lubrication is by intermittent oil feed from number four camshaft journal at approximately 30 lbs. per sq. in. (2.1 kg. per sq. cm.) pressure.

The oil lubricates all working parts of the exhauster and is expelled with the air through the exhaust port to the engine sump.

FITTING INSTRUCTIONS

Fitting the Vacuum Reservoir Assembly

1. Remove the two rear bolts from the right-hand side member.
2. Locate the rear bracket of the vacuum reservoir in this position and secure it with the two existing bolts.
3. The side member on early Major tractors were not drilled to accept the exhauster front mounting bracket bolts and it will then be necessary to use the front support bracket as a template and drill two $\frac{1}{2}$ in. holes in the side member at this location.
4. Secure the front bracket to the side member with two $\frac{1}{2}$ in. $\times$ $1\frac{1}{8}$ in. bolts, nuts and spring washers.

Fitting the Control Lever and Gauge Assembly

1. Remove the two top right-hand bolts from the rear axle to gearbox coupling flange.
2. Locate the lever and gauge assembly in position and secure with two $\frac{7}{16}$ in. X $2\frac{1}{8}$ in. bolts, nuts and spring washers (see Fig. 3).

The Quick Detachable Coupling

This is located on top of the right-hand rear axle housing and is so designed that should the trailer be accidentally detached, the coupling will be released so that no damage is done to the trailer hose con-

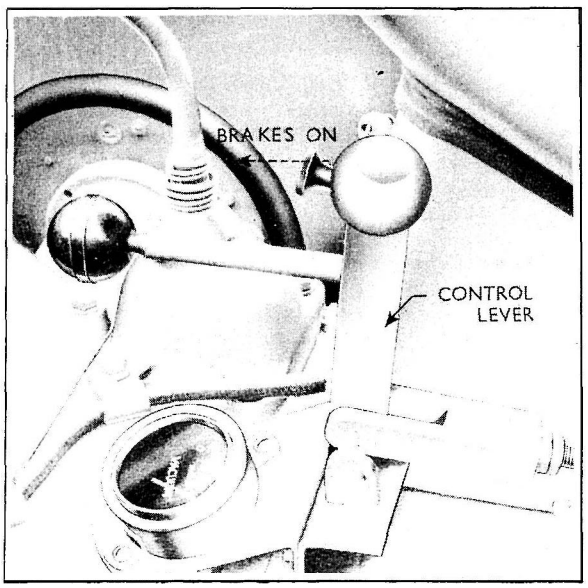

Fig. 3
Control Lever and Vacuum Gauge

nection. A dummy plug is provided with the coupling to be inserted whenever the trailer hose is disconnected.

Fitting the Quick Detachable Coupling (Fig. 4)

1. Remove the brass caps from the two inner tapped holes on top of the right-hand rear axle housing.
2. Locate the coupling bracket in this position and secure it to the axle housing with two $\frac{5}{8}$ in. × $1\frac{1}{4}$ in. bolts and spring washers.
3. Secure the coupling and pipe adaptor to the bracket with two $\frac{1}{2}$ in. X $1\frac{1}{8}$ in. bolts, nuts and spring washers.

The Reaction Valve (Fig. 3)

The reaction valve is mounted on a suitable bracket located beneath the battery carrier. The valve is so designed that its reaction characteristics produce a "sense of feel" enabling the driver to apply the trailer brakes with perfect control.

Fitting the Reaction Valve Assembly (Fig. 5)

1. Disconnect and remove the battery.
2. The necessary mounting holes are already drilled on current production tractors but if an early tractor is being handled it will be necessary to drill a 0 in. (9.53 mm.) hole $1\frac{3}{4}$ ins. (44.45 mm.) from the rear inside edge and $\frac{5}{8}$ in. (15.88 mm.) from the side of the battery carrier. Drill a second $\frac{3}{8}$ in. (9.53 mm.) hole $5\frac{9}{16}$ ins. (14.13 mm.) from the centre of the first one, $1\frac{1}{8}$ ins. (28.58 mm.) from the inside edge of the battery carrier.
3. Locate the bracket below the battery carrier with the distance pieces between the carrier and bracket.
4. Secure the bracket in position with two $\frac{5}{16}$ in. × $1\frac{3}{8}$ in. bolts, nuts and spring washers.

   NOTE.—The two holes for securing the reaction valve must be towards the rear of the bracket.
5. Secure the reaction valve to the bracket with two $\frac{5}{16}$ in. × $\frac{3}{4}$ in. bolts, nuts and spring washers.
6. Connect the control lever to the reaction valve by means of the adjustable rod. Adjust the rod so that the lever is vertical when in the off position (forward).

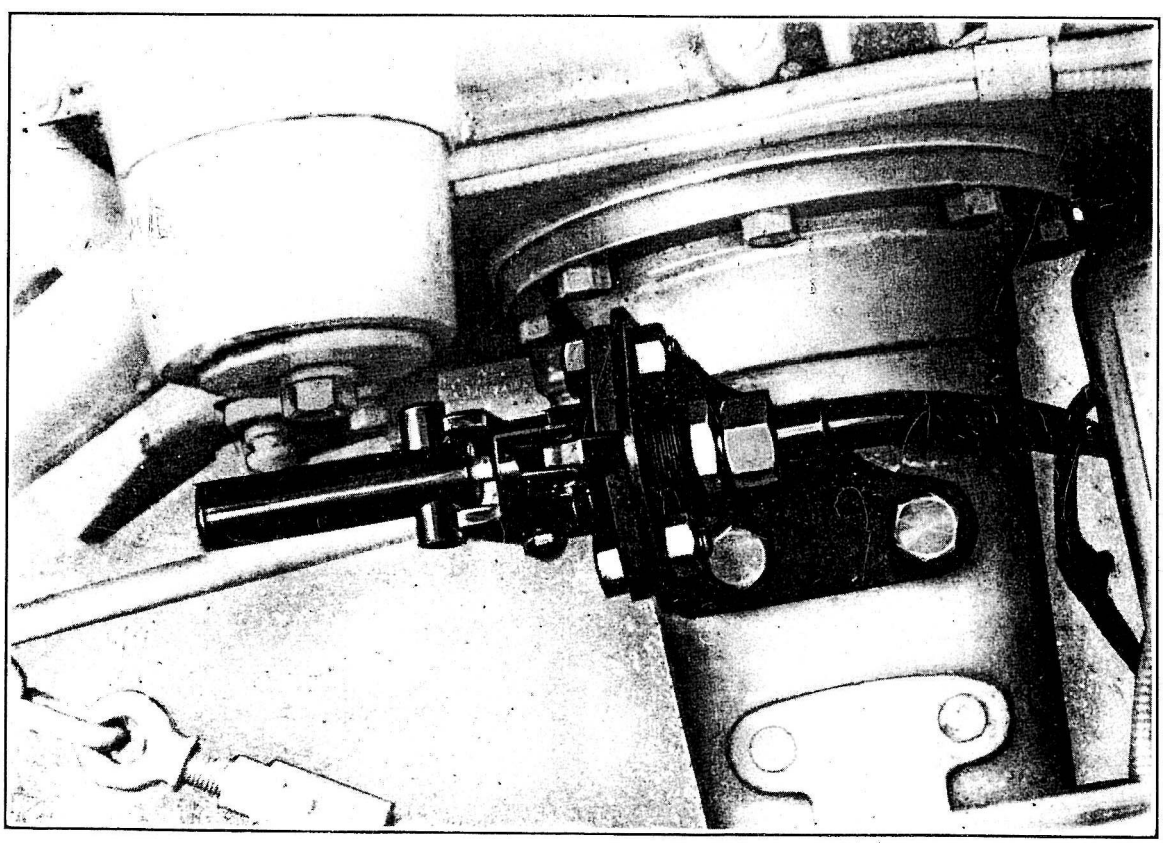

Fig. 4
Quick Detachable Coupling

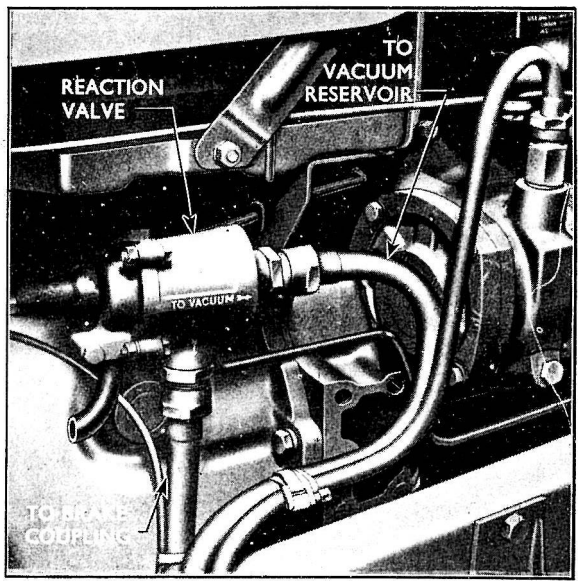

Fig. 5
Reaction Control Valve Assembly

Fuel Injection Pump

The fuel injection pump must be suitably modified to enable the rotary exhauster to be driven from the rear of the injection pump camshaft. A new fuel lift pump is then mounted on the injection pump cambox and is driven by the pump camshaft.

Modifying the Fuel Injection Pump

1. Remove the injection pump and completely dismantle.

2. Remove the camshaft bearings and shims from the pump camshaft and fit them to the new camshaft.

   NOTE.—Each bearing, race and cup must be kept as an assembly and renewed if unserviceable.

3. Fit the new camshaft to the cambox (taper toward the front) and secure the front cover and timing plate in place with the four bolts and spring washers.

4. Remove the rear camshaft bearing cup from the original end cover.

5. Fit the small oil seal, baffle and bearing cup to the new end cover.

6. Fit the end cover to the cambox with four countersunk screws and shakeproof washers. Use Tool No. CT.9020 to prevent damage to the oil seal.

7. Check the camshaft end-float and adjust if necessary.

8. Completely assemble, phase and calibrate the fuel injection pump.

9. Locate the lift pump gasket on the cambox studs, fit the lift pump in position and secure it with two nuts and spring washers.

10. Put one-sixth of a pint of engine oil in the pump cambox.

11. Fit the coupling (less driving dogs) to the injection pump camshaft and secure in place with the cotter bolt, nut and spring washer.

12. Refit and time the injection pump.

The Exhauster

The exhauster is driven from the rear of the fuel injection pump camshaft and is located on two suitable pads machined on the cylinder block. It is secured to the lift pump mounting flange and tappet chamber side cover.

Fitting the Exhauster

1. Turn off the fuel, remove the tank to lift pump pipe and remove the fuel lift pump.

2. Remove the rear bolt from the tappet chamber side cover.

3. Fit the copper washer to the special hexagon headed bolt (longer head than normal and drilled and tapped to accommodate exhauster mounting top bolt) and fit this bolt in the place of the one removed.

4. Remove the grub screw from the front mounting pad for the exhauster and locate the small rubber oil seal in the recess.

5. Loosely fit the coupling complete with driving dogs, and fibre pad to the exhauster shaft.

6. Locate the gasket on the mounting flange and fit the exhauster to the tractor.

7. Enter the two bolts in the mounting flange and the one in the top mounting bracket. Tighten these bolts evenly.

8. Rotate the engine until it is possible to locate the driving dogs in the fibre pad and injection pump coupling. Fit the dogs in position and secure them with the self-locking nuts.

9. Insert a .025 in. (.63 mm.) feeler blade between the fibre pad and metal half of the coupling. Push the exhauster coupling towards the injection pump and securely tighten the coupling bolt. Remove the feeler blade. This will ensure that there is a permissible end-float of .020 to .030 in. (.51 to .76 mm.) on the shaft.

Fitting Connections and Pipes

1. Connect up the fuel tap to lift pump pipe and the lift pump to fuel filter pipe.
2. Fit the $\frac{3}{16}$ in. (4.763 mm.) O.D. copper pipe between the vacuum gauge and the union at the front of the vacuum reservoir. Locate the pipe behind the reservoir mounting brackets and secure it to the rear bracket by means of a clip, nut, bolt and lockwasher. Fit a second clip to the pipe and secure it to the lower stud of the steering box side cover.
3. Fit copper washers as necessary to the vacuum tank to exhauster pipe adaptor and screw the adaptor into the exhauster body.
4. Connect the exhauster to non-return valve pipe to the exhauster.
5. Locate the small copper washer under the head of the banjo union bolt, the large copper washer between the banjo union and the non-return valve body and screw in the bolt to secure the union.
6. Fit the pipe connecting the vacuum union on the reaction valve body to the other union on the vacuum reservoir.
7. Connect the quickly detachable coupling to the reaction valve by means of the long pipe. Secure this pipe to the right-hand foot plate of the tractor by means of the pipe clip, bolt, nut and spring washer.
8. Secure the exhauster and reaction valve to reservoir pipes together by means of the flexible clips.
9. Turn on the fuel and bleed the system.
10. Start up the engine and check all joints for air leaks and security.
11. Test the equipment as indicated on page 8.

Overhauling the Exhauster

To Remove

1. Remove the pipe from the exhauster to the vacuum tank.
2. Remove the pipe from between the reaction control valve and the vacuum tank.
3. Remove the driving dog nuts on the injection pump coupling and remove the dogs.
4. Remove the one bolt from the top exhauster mounting bracket and the two from the bottom bracket and lift away the exhauster.
5. Remove the oil seal from the oil feed passage in the cylinder block.

Dismantling the Exhauster

1. Remove the bolt from the exhauster coupling and tap the coupling off the shaft.

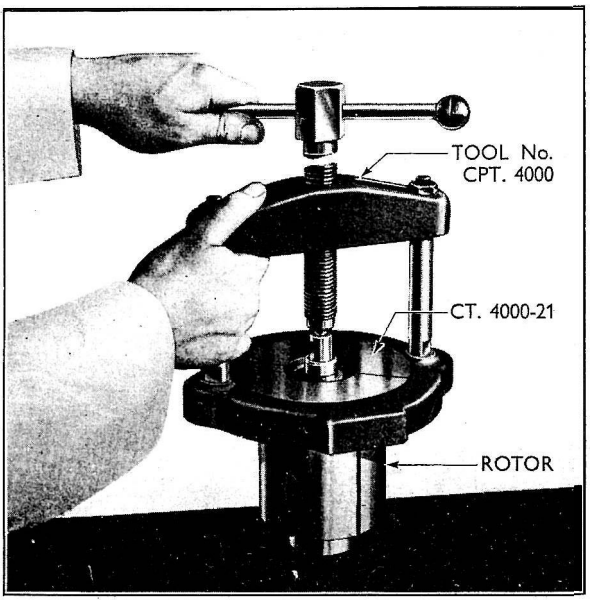

Fig. 6
Removing Rotor Shaft Bearings

2. Remove the four bolts from each end cover and remove the end covers.
3. Remove the seal from the drive end cover, using a suitable punch and remove the springs between the sealing plates and end covers.
4. Withdraw the rotor, sealing plates, bearings, cam rings, blades and oil seal collar from the body in one assembly.
5. Remove the blades from the rotor.
6. Remove the sealing plates from the rotor.
7. Unscrew the blanking plug in the base of the exhauster body and remove the ball and spring which make up the snifter valve.
8. The bearings, cam rings and shaft collar can be removed if necessary by using Tool No. CPT. 4000 with adaptors CT.4000-21. The jaws of the adaptors should be inserted between the bearings and the cam ring and the extractor bolt screwed up against the end of the rotor shaft, the ball race and the shaft collar being extracted together. The cam rings can then be removed from the rotor.

Reassembling the Exhauster

NOTE.—Before reassembly all parts should be thoroughly cleaned and inspected to determine whether they are fit for further service or whether they should be renewed.

Excessive wear on the internal bore of the exhauster body, denoted by lines or "ripples" extending for the greater part of the circumference of the body, will necessitate the replacement of this part.

Worn bearings should obviously be replaced when carrying out any overhaul of this nature. If premature failure has occurred, this may have been caused by the rotor shaft being exposed to end thrust or possibly a shortage of oil.

A certain amount of wear on the rotor blades is permissible but should the inner edges become appreciably "stepped" where they contact the cam ring, the blades should be replaced.

The piston rings should only be removed from the sealing plates when the rings or the plates need replacing. It is normally found that the rings will last a lifetime on the exhauster if handled with care. Wear on the faces of the sealing plates may necessitate their renewal especially where excessive scoring has occurred. The locating pegs are rivetted to the sealing plates and are supplied together as an assembly.

It is advisable to renew all oil seals and gaskets when reassembling an exhauster.

1. Refit the front oil seal cover plate then install the oil seal in the front cover, using adaptor CT.6068, with 550 handle (see Fig. 7), with the lip of the seal towards the inside.
2. Reassemble the rotor assembly if previously dismantled by fitting the cam rings on the rotor shaft, refit the bearings and drive on the front oil seal collar up to the bearing, using Tool No. CT.6067. (See Fig. 8) then refit the vanes.
3. Refit the sealing rings to the end sealing plate: and pass the sealing plates over the bearings, locating them on the cam ring spigot.
4. Fit the rotor assembly into the exhauster body ensuring that the sealing rings enter the bore of the body completely to allow the end covers to seat correctly.

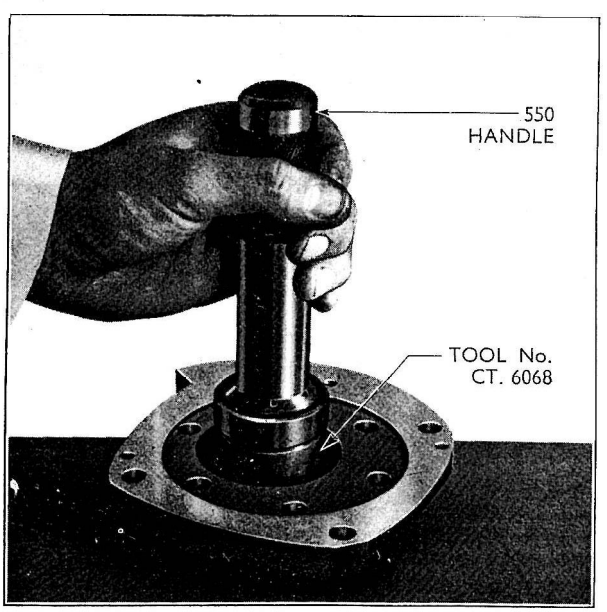

Fig. 7
Replacing End Cover Oil Seal

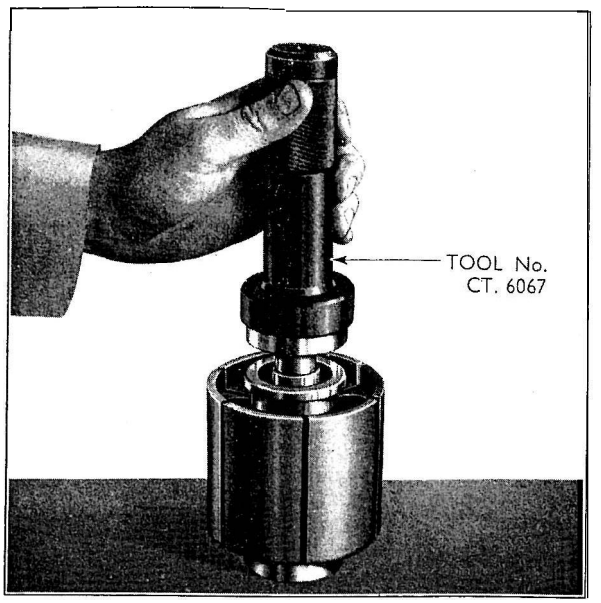

Fig. 8
Replacing Rotor Shaft Bearing

5. Replace the end sealing plate springs in their recesses in the end covers, a smear of grease will locate them during assembly.
6. Smear the new end plate gaskets with grease and stick them to the end plates. Locate the oil seal rear plate in the recess in the drive end cover making sure that it drops to the bottom of the ball race seat.
7. Fit the blank end plate opposite to the drive end of the exhauster and retain in position with the four bolts and spring washers.
8. Fit the seal guide (Tool No. CT.6066) over the end of the exhauster shaft to protect the seal and fit the drive end plate in position. (See Fig. g.)
9. Replace the snifter valve ball on its seating and locate the larger diameter of the coil spring in the retaining plug. Ensure that the sealing washer is in good condition before refitting it and screw in the retaining plug.

To Replace

1. Fit a new sealing ring in the oil feed recess in the cylinder block then follow operations 5 to g of section headed "Fitting the Exhauster" on page 5.
2. Replace the pipe from the exhauster to the vacuum tank and ensure that all union nuts are tightened securely.

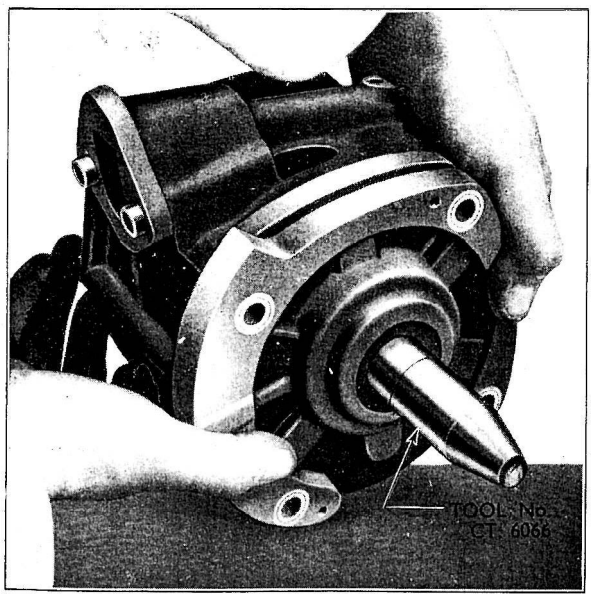

Fig. g
Replacing Drive End Plate

Testing

Run the engine until the vacuum gauge reading is 25 ins. (63.5 cm.) Hg. Stop the engine and observe the gauge for rate of fall of the pointer. The rate of fall must not exceed 1 in. (2.54 cm.) in three minutes. If the rate of fall is greater than this, check connections on all pipe assemblies (except control valve to coupling). Tighten unions and nuts as necessary and check the snifter valve in the vacuum tank for correct seating.

Ensure that the dummy plug is firmly inserted in the coupling and repeat the above test with the control lever pulled back. After the initial drop, when the lever is operated, the gauge pointer should remain steady and the ccnsequent drop should not exceed 1 in. (2.54 cm.) in three minutes. If the leak rate is greater than this, check the connections on the pipe between the control valve and coupling, tighten as necessary.

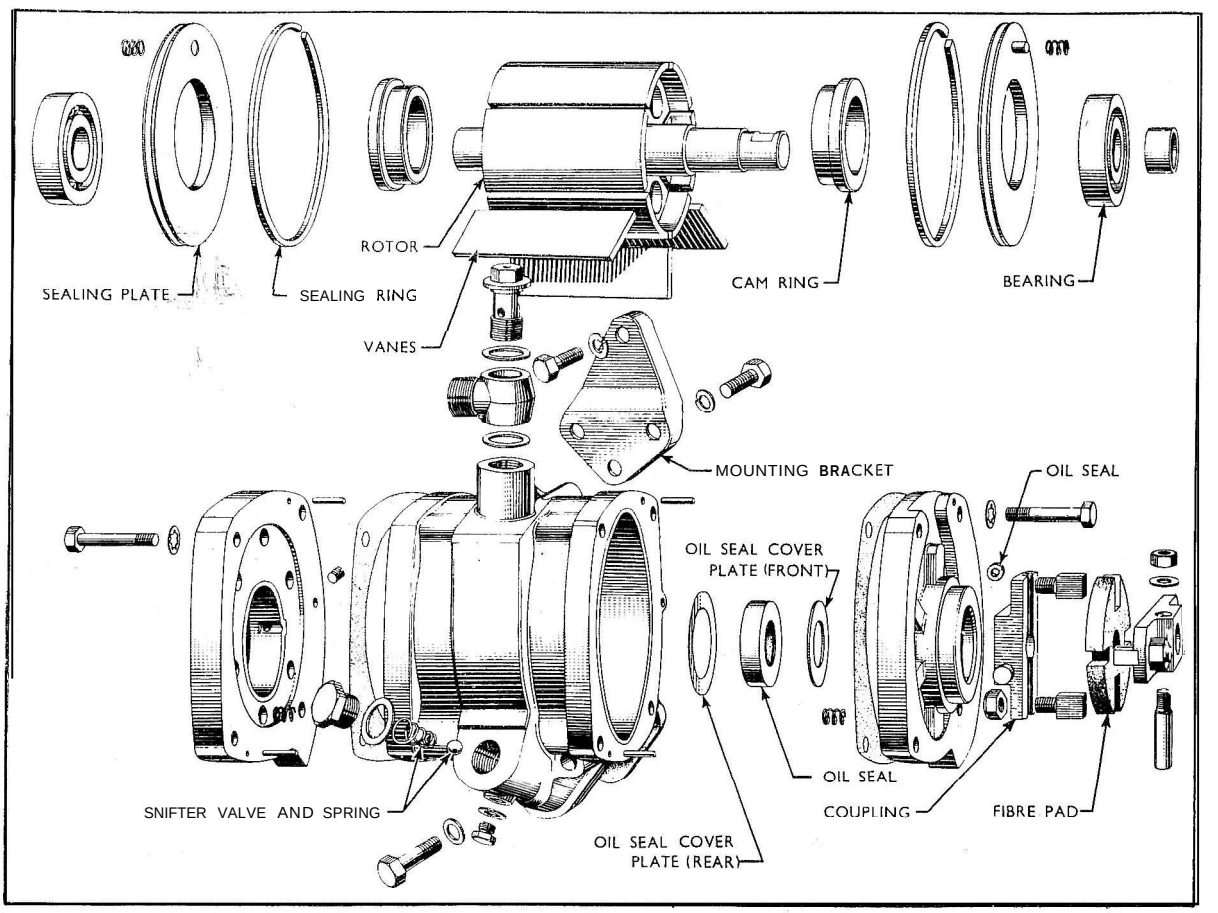

Fig. 10
Exploded View of Exhauster

DISC BRAKES

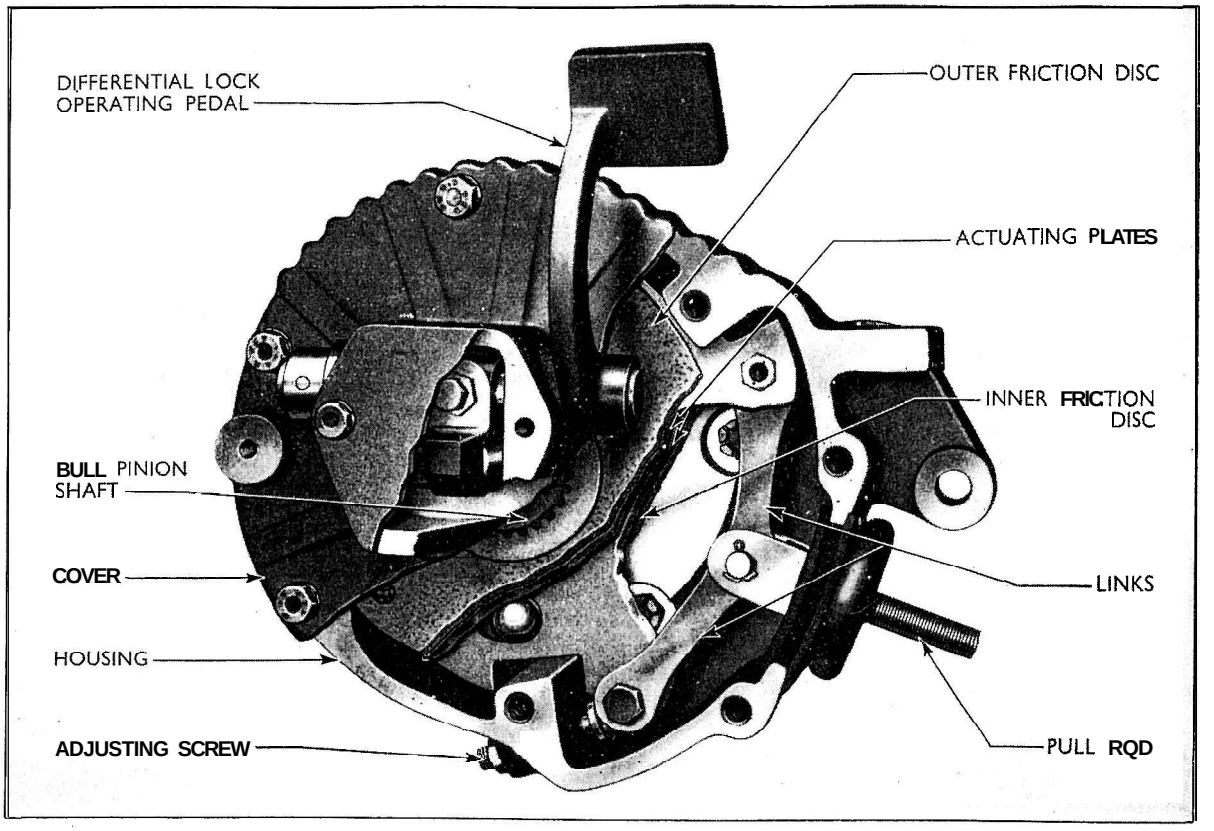

Fig. 11
The Disc Brake

With the Super Major an entirely new braking system has been introduced, the expanding shoe and drum brakes fitted for many years having been superseded by disc brakes (see Fig. 11).

Although braking is still effected at the bull pinion shafts, the brake extension housing is no longer employed, the brake assembly being bolted directly to the rear transmission housing.

The disc brakes are self-energising, totally enclosed, with double rotating friction discs. The two friction discs, which are splined to the bull pinion shafts, are located one on each side of an actuating plate assembly. The actuating plate assembly consists of two pressure plates having five ramped pockets in their inner faces in each of which is a steel ball. Three short helical springs are employed to hold the two actuating plates in contact with the balls and to act as actuating plate return springs.

Movement at the brake pedal is transferred by a pull rod and links to the actuating plates. The resultant rotation of the actuating plates in opposing directions causes the balls to ride up the ramps thus producing an axial movement of the plates, which introduces a braking effect by compressing the friction discs against the brake housing and cover (see Fig. 12).

When braking commences, the actuating plates tend to rotate under the action of the friction discs, but movement of one of the plates (depending upon the direction of rotation) will be limited by a stop within the brake housing. The other plate, however, will continue to rotate causing the balls to ride further up the ramps, thus increasing the braking effect.

Upon releasing the pressure on the brake pedal, the actuating plates return to their original position with the balls at the bottom of the ramps under the action of the actuating plate return springs. The friction discs are then free to rotate.

To ensure even braking when both brakes are applied, a compensating spring is provided in the operating linkage to each pedal.

In order that the radial movement of the actuating plate is maintained at a practical minimum to avoid distortion of the actuating linkage when braking commences, the lower stop within the brake housing is provided with a means of adjustment.

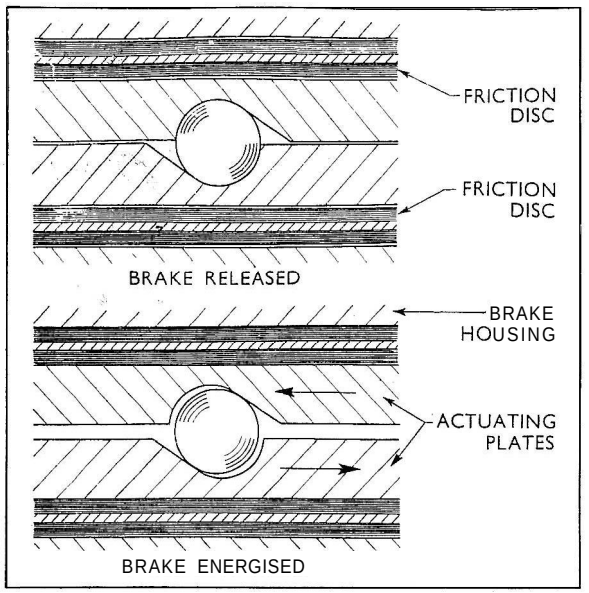

Fig. 12
Actuating Plate Operation

To Adjust the Brakes

1. Slacken the lock nut on the lower stop and tighten the adjusting screw (see Fig. 13) until the brake is fully locked.
2. Slacken off the screw one and a half turns and tighten the lock nut.
3. With the pedal return spring removed, adjust the pull rod nut (see Fig. 14) until the pedal just contacts the pedal upper stop. Slacken off the pull rod nut one and a half turns. This will give a pedal-free travel of 1.5 in. (38.1 mm) at the pedal pad or .81 in. (20.57 mm) at the pedal upper stop.
4. Connect the pedal return spring.
5. Operate the pedal and re-check the free travel, making further adjustment if necessary.
6. Repeat this operation for the other brake.

To Dismantle the Disc Brakes

1. Remove the bolts securing the platform to the platform support bracket and brake housing and remove the platform. Note that in the case of the left-hand brake it is also necessary to remove the clutch pedal retracting spring before removing the platform.
2. Disconnect the brake actuating levers by removing the split pins and clevis pins from both ends of the levers. Remove the levers.
3. Remove the seven bolts securing the brake housing cover to the brake housing and remove the cover.

   In the case of the right-hand brake, the brake housing cover and differential lock operating pedal are removed as an assembly. Further dismantling of this assembly will normally be necessary only if it is required to renew any part of the differential lock operating pedal assembly.
4. Withdraw the outer friction disc from the brake housing.
5. Remove the actuating plate assembly complete with links, operating rod and dust cover.
6. Withdraw the inner friction disc from the brake housing.
7. If necessary remove the brake housing taking care not to disturb the bull pinion housing and shims whilst carrying out this operation.

To Dismantle the Brake Actuating Plates Assembly

1. Remove the rubber dust cover and remove the bolts securing the links to the actuating plates. Note that the nuts are staked to these bolts during initial assembly.
2. Remove the three actuating plate return springs and separate the actuating plates. Remove the five steel balls.

To Reassemble the Brake Actuating Plates Assembly

1. Thoroughly clean and inspect all parts and renew any parts which may be damaged or worn.

   NOTE: DO NOT LUBRICATE EITHER THE STEEL BALES OR THEIR SEATINGS IN THE ACTUATING PLATE.
2. Lay one actuating plate with its inner face uppermost on the bench and locate the five steel balls in their seatings.

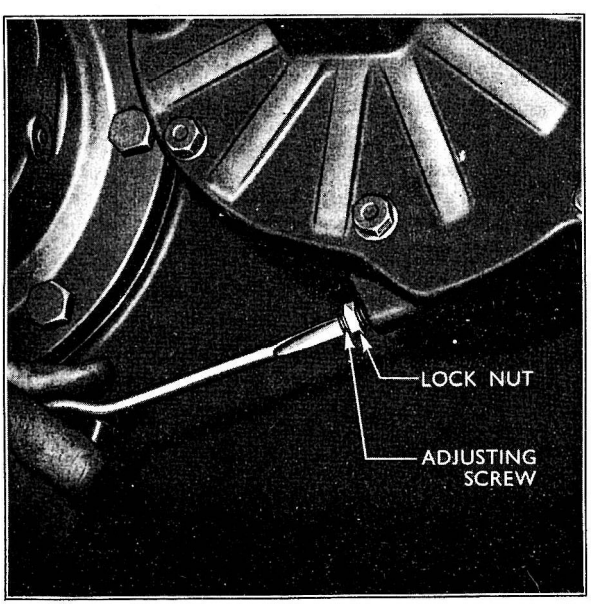

Fig. 13
Adjusting the Disc Brake

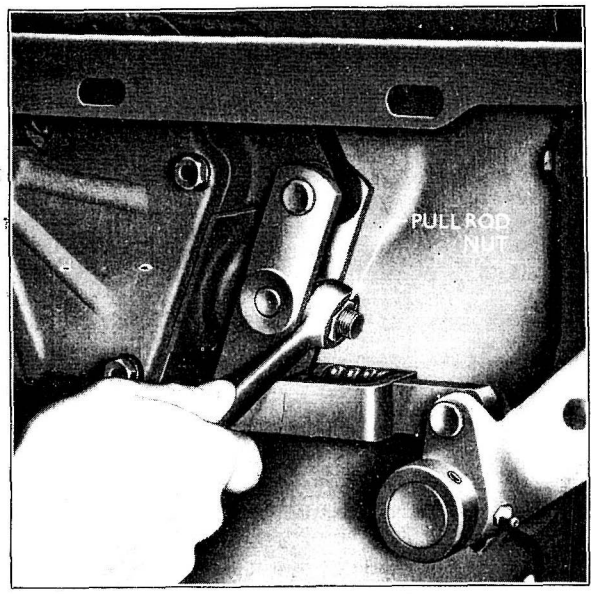

Fig. 14
Adjusting Pedal Free Movement

3. Locate the other actuating plate on top of the steel balls.

4. Fit the three actuating plate return springs ensuring that they are correctly located on the lugs on the inner edge of the actuating plates otherwise they may foul the bull pinion shaft when the assembly is refitted.

5. Replace the links and pull rod. Stake the nuts and bolts securing the links to the actuating plates.

To Reassemble the Disc Brakes

1. Check the oil seal in the brake housing for damage. If necessary replace the oil seal using Tool No. T.4085 with the 550 handle.

2. Replace the brake housing ensuring that the holes in the shims behind the flange of the bull pinion housing are in alignment with the holes in the rear transmission and bull pinion housings. Replacement of the brake housing is facilitated by using the bull pinion housing locating studs Tool No. PT.4063. Replace the six bolts to secure the housing in position and tighten to a torque of 55-65 lb./ft. (7.61-8.99 kg.m.).

3. Check the friction linings for excessive wear, scoring, cracking or loose rivets. Also check the brake discs for distortion, cracking and worn or damaged splines. Replace the inner friction disc.

4. Replace the actuating plate and pull rod assembly and fit the rubber dust cover, ensuring that the cover fits correctly into the recess in the housing.

5. Replace the outer friction disc.

6. Replace the brake housing cover ensuring that the rubber dust cover fits tightly against the cover. In the case of a right-hand brake, the cover and differential lock pedal are replaced as an assembly.

7. Connect the brake actuating lever to the brake housing and to the compensating spring yoke by replacing the clevis pins and split pins at both ends of the levers.

8. Replace the platform and in the case of the left-hand brake, the clutch pedal return spring.

9. Adjust the brakes as previously described.

To Remove and Dismantle the Brake Operating Linkage

1. Remove the split pin and clevis pin connecting the compensating spring rod to the brake pedal, or to the brake lever in the case of the left-hand brake.

2. Remove the split pin and clevis pin connecting the compensating spring yoke to the brake actuating levers and remove the rod and the yoke assembly.

3. Remove the pull rod nut and the split pin and clevis pin connecting the brake actuating levers to the brake housing. Remove the brake actuating levers and block.

4. Dismantle the compensating spring rod and yoke assembly by removing the self-locking nut and withdrawing the rod from the yoke, thus releasing the washer, compensating spring and sleeve.

To Reassemble and Replace the Brake Operating Linkage

1. Insert the compensating spring rod in the yoke and replace the sleeve, compensating spring and washer on the rod. Fit the self-locking nut and tighten to the point where the overall length of the compensating spring is 1.17 in. (29.72 mm).

2. Fit the block and pull rod nut to the pull rod and fit the actuating levers to the block.

3. Connect the actuating levers to the brake housing by fitting the clevis pin and a new split pin.

4. Connect the compensating spring rod and yoke assembly to the brake actuating levers and the brake pedal by fitting the clevis pins and new split pins.

5. Adjust the brakes as previously described.

To Remove and Dismantle the Brake Pedal Cross-Shaft

1. Drain the oil from the rear transmission housing or lower the oil level until it is below the brake cross-shaft.

2. Jack up the rear of the tractor and remove the right-hand rear wheel.

3. Disconnect the balance lever to clutch pedal rod at the clutch pedal end. Disconnect the compensating spring rod from the brake operating lever. Remove the clutch pedal return spring and stop bracket.

4. Remove the cotter securing the left-hand brake operating lever to the cross-shaft and remove the clutch pedal, brake operating lever and thrust washer from the cross-shaft.

5. Remove the split pin and clevis pin securing the brake locking catch pawl to the brake pedal stop bracket. Remove the brake pedal stop bracket.

6. Disconnect the brake pedal return springs and remove the pin connecting the brake pedal to the right-hand brake compensating spring rod and yoke assembly.

7. Remove the pin, retaining collar and washer and pull off the right-hand brake pedal. Remove the spacer washer which separates the inner and outer brake pedals.

8. Slacken the clamp bolt and remove the inner brake pedal. Extract the " Woodruff" key from the shaft and remove the thrust washer.

9. Remove the brake cross-shaft withdrawing it towards the right-hand side. If worn or damaged, the cross-shaft oil seals should be removed and new seals fitted using Tool No. T.2004. Note that if necessary these seals may be replaced without removing the brake cross-shaft.

To Reassemble and Replace the Brake Pedal. Cross-Shaft

1. Replace the brake cross-shaft making the assembly from the right-hand side.

2. Fit the thrust washer, clutch pedal and brake lever to the left-hand end of the cross-shaft and replace the cotter to secure the brake lever to the shaft.

3. Connect the clutch lever to balance lever rod to the clutch pedal, and the compensating spring rod to the brake operating lever.

4. Replace the clutch pedal return spring and the pedal stop bracket.

5. Fit the thrust washer and " Woodruff" key to the right-hand end of the cross-shaft and replace the inner brake pedal. Tighten the brake pedal clamp bolt.

6. Replace the spacer washer, outer brake pedal, washer and retaining collar. Fit the pin to secure the retaining collar. Check that there is not less than .015 in. (.38 mm) clearance between the inner thrust washer and the rear transmission housing to allow free movement of the pedals.

7. Replace the brake pedal return springs and the pedal stop bracket.

8. Replace the clevis pin and the split pin to secure the brake locking catch pawl.

9. Connect the compensating spring rod and yoke assembly to the pedal and adjust the brakes as previously described.

10. Replace the wheel and fill the rear transmission housing to the required level with the appropriate grade of oil.

ELECTRICAL SYSTEM

Basic principles of the electrical system on Major diesel tractors are fully covered in the Fordson Major Repair Manual but detail changes have occurred since the inception of the model and therefore this section will summarise the more important items affected.

BATTERIES

In 1956 two significant changes were made

(a) Twin 6-volt batteries were fitted in place of the previous single 12-volt unit with the purpose of making handling easier. The total capacity of the battery unit was unchanged, but detail changes were made to the battery support and tray assembly. The change produced no problems from a service point of view apart from ensuring that the connections were correct, i.e., with the twin batteries the negative terminal on the right-hand battery is connected to the positive terminal on the left-hand battery, whilst the negative terminal of the left-hand battery is connected to the starter solonoid and the positive terminal of the right-hand battery to earth.

(b) Dry charged batteries were introduced for service.

Service instructions for this type of battery are contained on the battery label and have been fully covered in Service Letters on this subject. For convenience however these are repeated and particular attention is drawn to the instruction that these batteries should not be allowed to stand for more than two days after tilling without receiving a charge.

Filling a Dry Charged Battery *(as used on Diesel Tractors)*

1. Fill each cell with electrolyte of the correct specific gravity (see Table 1) until the electrolyte is ⅝ in. (15.8 mm.) above the tops of the separators. The electrolyte should be at a temperature preferably between 70° and 90°F. (21° and 32°C.).

The level in each cell will fall rapidly during the first few minutes following filling, and thereafter progressively at a much lower rate.

Allow the battery to stand for approximately ten minutes, then add electrolyte of the same specitic gravity to bring it up to the correct level.

2. Approximately fifteen minutes after initial lilling the battery should be ready for service.

Prolonged or unsuitable storage, also low ambient and battery temperatures may result in a longer standing period (up to two hours) being required to ensure sufficient output from the bnttery for starting a cold or stiff engine. Before installation and if the necessary time and facilities exist, it is beneficial to give a freshening charge for about four hours at the normal charging rate of 10 amps. and then check that all cells are gassing freely. The specific gravity should now approach that of a fully charged battery (see Table 1).

NOTE—If the battery is put into service after the date shown on the label, it should be dealt with as in paragraph 1 above, but a special charge must then be given at the normal charging rate prior to installation in the tractor. This charge should be continued until the voltage and specitic gravity of all cells remain constant for five successive hourly readings with all cells gassing freely. The specitic gravity of a normal fully charged battery is shown in Table 1.

3. If, owing to unforeseen circumstances, the battery is not put into service immediately after lilling, the battery should not be allowed to stand for more than two days before receiving a charge

	Temperate Climates	*Tropical Climates*
Specific gravity of electrolyte for filling new batteries	1.260 (30° Baumé)	1.230 (27° Baunie)
Specific gravity of electrolyte at end of charge ...	1.270 to 1.285 (31° to 32° Baunie)	1.240 to 1.255 (28° to 29.5° Baunie)
Maximum permissible temperature of electrolyte during charge	110F°. (43.3°C.)	125°F. (51.7°C.)

Table 1

on or off a tractor. Before charging the battery check the electrolyte level in each cell.

4. The electrolyte levels and specific gravity should again be checked within a few days of going into service, and if necessary, the electrolyte levels topped-up.

?

General

After dry charged batteries have been initially filled and charged, it is possible they may remain idle. If so, they should receive a bench charge, preferably once per month, especially in hot climates.

It is important that a battery which has been processed for full dry charge shall be given a charge either on or off a tractor within two days after initial filling. Since there may be a delay in getting the battery into service after it has been filled with electrolyte, it is most desirable that the personnel responsible for filling arrange for the battery to be given a short charge of about four hours' duration in every case before despatch, as indicated on the label attached to each battery.

The dry charged characteristics of batteries slowly fall off with time; hence the limiting date stamped on the label. Such falling off in dry charge characteristics does not mean that a battery which has remained in stock after the expiry of the period given on the label will riot have a perfectly normal life in service providing that it is given a sufficient charge before being fitted. It is, however, very much to the Dealer's advantage to see that dry charged batteries are taken from his stock in proper rotation, so that no batteries are kept in stock for excessive periods, and the need to give a lengthy charge before sending a battery out is avoided.

STARTER MOTOR

To facilitate service of the starter motor drive pinion and clutch assembly, all the detail parts of the assembly have been released for service and are available if the pinion and clutch assembly requires attention. This obviates the necessity for replacing the complete pinion and clutch assembly as required previously.

The multi-plate clutch in' the pinion and clutch assembly is interposed between the armature shaft and the pinion and protects the starter motor from damage due to overloading should the engine backfire. The clutch is set to slip at a pre-set torque figure which is approximately three times the normal full starting torque of the starter motor.

The clutch also only allows torque to be transmitted from the starter motor pinion to the flywheel ring gear, and therefore, should the pinion be inadvertently held in mesh with the ring gear when the engine is running and the

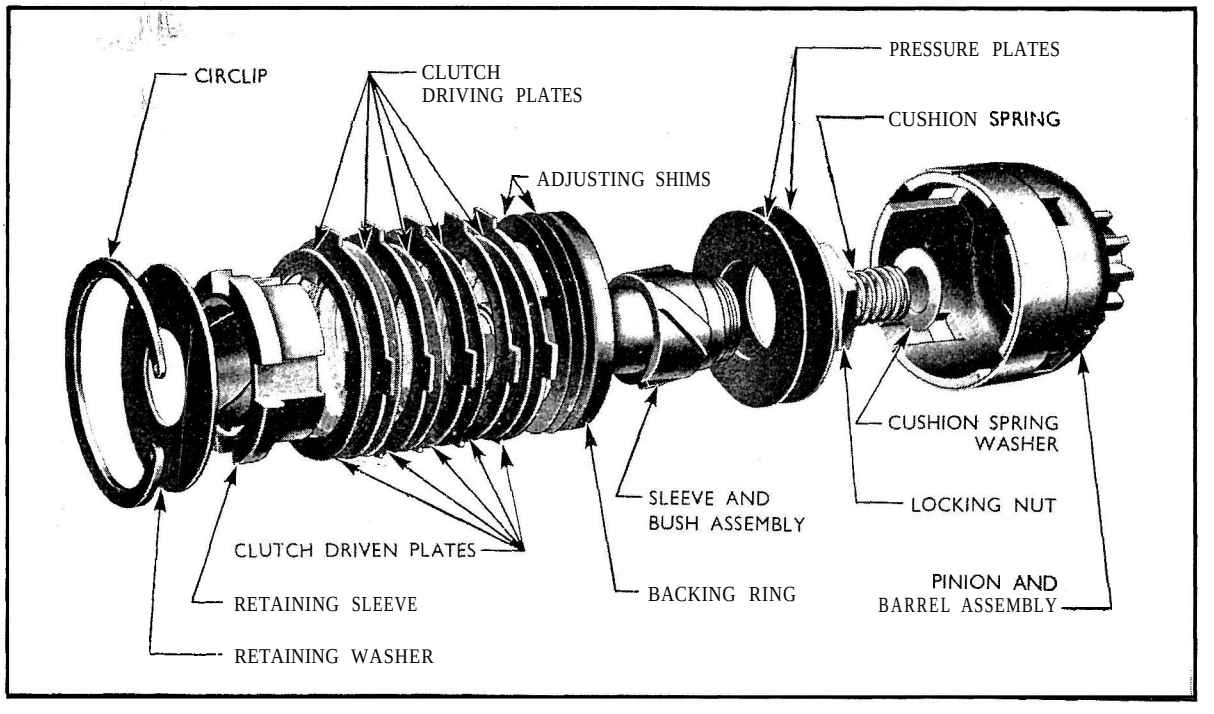

Fig. 1. Exploded View Pinion and Clutch Assembly

engine is tending to drive the starter motor, the clutch will "free-wheel" and no damage will occur to the starter motor

The clutch slipping torque is adjustable by means of shims interposed between the backing ring and the clutch plates (see Fig. 1), and after the clutch and pinion assembly has been overhauled, the slipping torque has to be re-set as detailed in subsequent paragraphs.

To Remove and Dismantle the Pinion and Clutch Assembly

1. Disconnect the battery lead from the negative post of the battery and the starter cable from the field terminal on the starter motor.

2. Disconnect the two leads from the starter relay switch.

3. Remove the split pin and clevis pin securing the operating rot! to the starter actuating lever.

4. Unscrew the three starter motor securing bolts evenly and detach the starter motor.

5 Remove the four dowelled screws securing the relay switch bracket to the starter motor body and remove the bracket and cover.

6. Release the ends of the actuating lever return spring from under the flange in the drive housing.

7. Unscrew the nut from the actuating lever pivot bolt and remove the bolt.

8. Remove the return spring, two spacers and the two halves of the actuating lever from the drive housing, and reassemble them together to ensure correct positioning when reassembling the starter motor.

9. Remove the two through bolts securing the starter motor drive housing to the starter motor body and remove the drive housing.

10. Remove the thrust washer and slide the pinion and clutch assembly off the armature shaft.

11. Open the retaining cup securing the lock ring on the pinion and clutch assembly. (See Fig. 2.)

12. Depress the brake plate and remove the lock ring and retaining cup.

13. Remove the brake plate, operating bush and tension spring.

14. Remove the large internal circlip from the pinion and barrel assembly, and withdraw the sleeve and bush assembly complete with the clutch unit.

15. Remove the cushion spring and thrust washer from inside the pinion and barrel assembly.

16. The clutch unit can be completely dismantled by removing the retaining washer, retaining sleeve, clutch plates, adjusting shims and backing ring.

17. The nut retaining the two pressure plates is secured by peening and it should only be removed if the plates require renewing.

18. Clean all parts and inspect the pinion teeth and clutch plates for wear. Ensure that the clutch plates are free to move in their respective engagement splines. Check the cushion spring and tension spring for any signs of weakness.

Renew any parts that are worn or damaged in any way.

To Reassemble and Replace the Pinion and Clutch Assembly

1. If they have been removed, replace the pressure plates, fit the locking nut and secure by peening.

2. Replace the clutch plates on the retaining sleeve and refit this assembly with the adjusting shims and backing ring onto the sleeve and bush assembly. Care should be taken to ensure that the clutch plates are in the correct order (see Fig. 1) and that the ground face on the backing ring is adjacent to the adjusting shims. The clutch plates and helices on the inside of the retaining sleeve should be smeared with a thin coating of high melting point grease before assembly.

3. Fit the flat washer and cushion spring inside the pinion and barrel assembly so that they are positioned centrally over the pinion bearing bush.

4. Instal the clutch unit in the pinion and barrel assembly, fit the retaining washer and secure in position with an internal circlip.

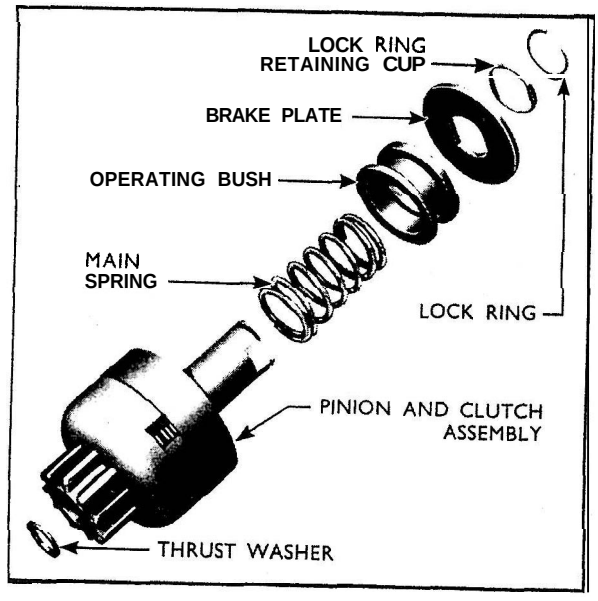

Fig. 2. Starter Motor Drive

5. Position the pinion and clutch assembly in a vice so that the pinion is securely clamped in soft metal vice jaws and the assembly is upright.

6. Using the special socket (Tool No. CT.9513) and a suitable torque wrench apply an anti-clockwise torque to the central sleeve of the assembly. (See Fig. 3.). The clutch should not slip until the torque applied is between 65 and 80 lbs. ft. (8.983 to 11.056 kg.m.).

7. If the clutch slips at below the minimum slip torque, dismantle the pinion and clutch assembly and add shims until the correct slip torque is obtained.

If the clutch slips at above the upper torque limit, dismantle the clutch and remove shims until the correct slip torque is obtained.

There are three thicknesses of shims available in thicknesses of .004 in. (.102 mm.), .005 in. (.127 mm.) and .006 in. (.152 mm.).

8. Replace the tension spring, operating bush and brake plate over the sleeve and bush assembly, and compress the tension spring.

9. Position a new lock ring retaining cup on the shaft and fit a new lock ring.

10. Release the pressure compressing the spring and close the outer edge of the retaining cup inwards over the lock ring.

11. Refit the pinion and clutch assembly to the armature shaft and refit the thrust washer.

12. Replace the starter motor drive housing, ensuring that the dowel is correctly located. Enter the two through bolts and spring washers and securely tighten.

13. Locate the lower half of the actuating lever in the groove in the operating bush with the thrust shoes offset away from the pinion. Fit the upper half of the actuating lever with the plain face towards the pinion. Refit the return spring and two spacers with the loop in the spring downwards and away from the starter body, and enter the lever pivot bolt. Locate the spring ends in the housing behind the flange. The lever pivot bolt should be lightly smeared with high melting point grease before assembly in the housing.

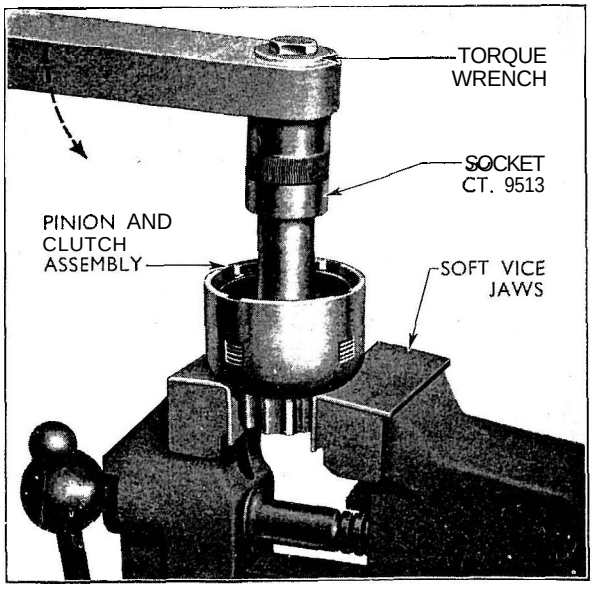

Fig. 3 Checking Slip Torque

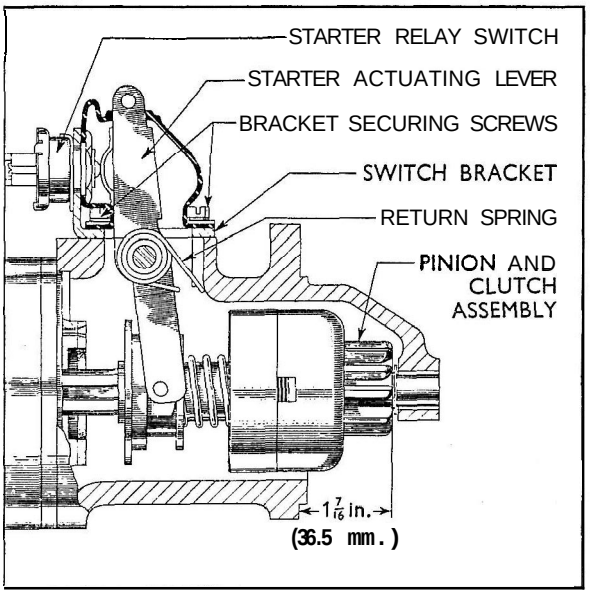

Fig. 4. Diesel Starter Actuating Mechanism in the Operating Position

14. Refit the spring washer and nut to the pivot bolt and tighten securely.

15. Refit the relay switch cover and switch bracket assembly, and enter the four dowelled screws.

16. Depress the actuating lever until the distance from the rear face of the pinion teeth to the starter motor mounting flange is $1\frac{7}{16}$ ins. (36.5 mm.) as shown in Fig. 4.

Adjust the relay switch plate until the contacts are just closed with the pinion at this setting. Securely tighten the retaining screws. Check that the contacts are closed by means of a battery and bulb.

17. Pass the drive end of the starter motor into the clutch housing aperture. Replace the three starter motor securing bolts and spring washers, and tighten evenly.

18. Refit the clevis pin and split pin securing the operating rod to the starter actuating lever.

19. Reconnect the two leads to the relay switch.

20. Reconnect the starter cable to the field terminal on the starter motor and the battery lead to the negative post on the battery.

VOLTAGE CONTROL REGULATOR

The regulator incorporates a combined cut-out and voltage regulator. Normally this regulator requires very little attention in service.

Should, however, it be suspected that it is not functioning correctly, tests should be made to ensure that the rest of the electrical circuits are in good condition and are not affecting the operation of the regulator.

Effective after approximate Engine No. 1426221 the design of the regulator was changed and although functionally identical the procedure for adjustment differs in detail. The latest adjustment figures for both types will therefore be covered in this section.

With the introduction of the Power Major the regulator was made more accessible by moving it from behind the control box to a mounting on the air cleaner bracket. (See Fig. 5.) At the same time it was enclosed in a separate metal dust cover.

PRELIMINARY CHECKS

Important points which can give a false indication of a regulator fault are given below, and should be carefully checked before attempting to effect any replacements.

Fan Belt

Make certain that the generator support brackets are securely tightened in position. Check the fan belt and ensure that it is adjusted correctly without the slightest suspicion of belt "slip." A slipping belt may cause an erratic or low charging rate. Ensure that the fan belt is correctly aligned and that the pulleys are not damaged.

Battery

Check the battery and test with a hydrometer and high rate discharge test-meter. Top up if necessary. Clean off any corrosion from the battery lugs and cable ends and make certain that the top of the battery is dry.

A sulphated battery or corroded lugs will cause a low output even though the open circuit setting of the regulator may be correct. Both these conditions will probably result in unsatisfactory starter motor operation.

If a battery has a short-circuited cell, or the top of the battery has become soaked with acid, or is in a poor condition due to abuse or prolonged service, it will cause a high output.

Check the earth connections from the battery to the body, and from the regulator, to ensure that they are tight and in good condition, as a poor earth will cause a rise in voltage.

Generator and Connections

Check that the generator is functioning satisfactorily and ensure that the leads "D" and "F" are not crossed either at the regulator or generator. If the leads are crossed, the regulator points will have 'welded together" the moment the engine was started. Make sure that the leads are not broken or damaged and that the connections are tight.

To Test the Generator

1. Disconnect the leads from the regulator terminals marked "D" and "F" respectively and connect them together. Attach the negative lead of a moving-coil type voltmeter, calibrated to at least 30 volts, to these leads and the positive lead to a good earth.

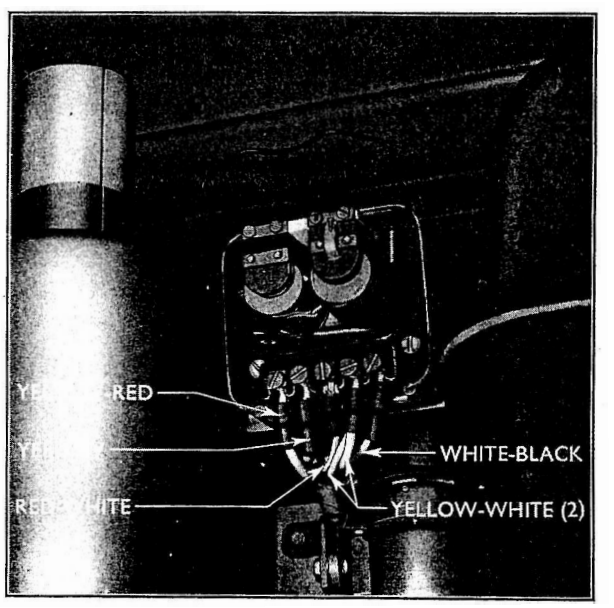

Fig. 5
Voltage Control Regulator (Current Type)

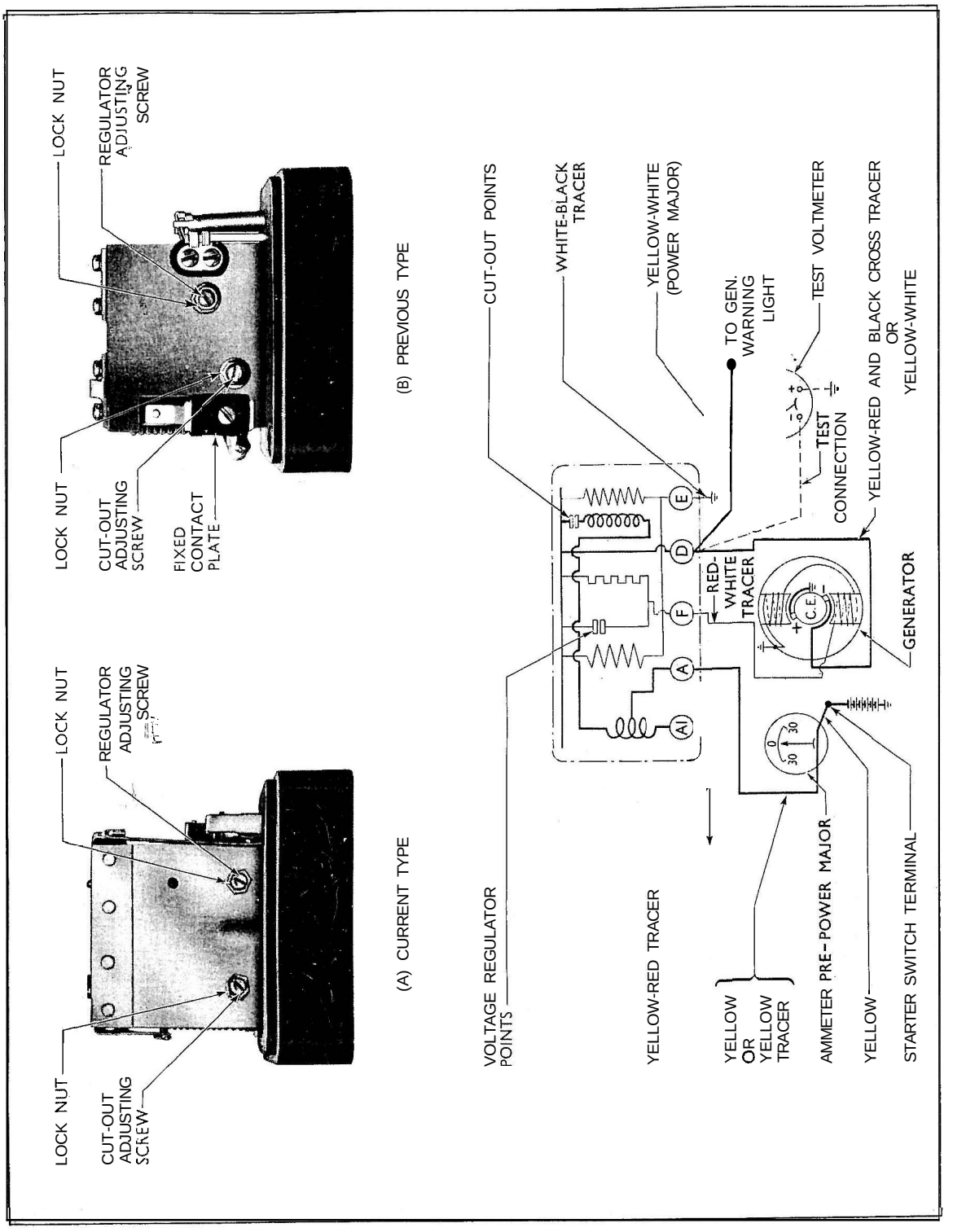

Fig. 6
Regulators and Wiring Diagram

3. Start the engine and gradually increase the speed to a fast idle (approximately 1,000 r.p.m.), when the voltmeter reading should rapidly rise without fluctuation above 24 volts. DO NOT increase the engine speed above a fast idle in an endeavour to obtain this voltage as this will give a false reading.

If there is a low or no reading, first check the generator leads. If the leads are in good condition, carefully check over the generator and effect any repairs that may be required in line with the usual procedure. It may be that the generator has become demagnetised, possibly due to the leads having been crossed (regulator points will be " welded " together in this case).

After checking that the generator is in good order, proceed to test the regulator. This should only be carried out by an experienced electrician who is thoroughly acquainted with the correct method to be adopted.

3. Reconnect the leads " D " and " F " from the generator to the terminals " D" and " F " on the regulator.

TESTING AND ADJUSTING THE REGULATOR

1. Insulate the cut-out points with a thin strip of mica or withdraw the cables from the terminals marked "A" and"A1" (see Fig. 6) and join them together.

2. Connect the negative lead of the test voltmeter to terminal " D" on the regulator and the positive lead to a good earth ,or the " E " terminal.

3. Adjustment must be made with the regulator cold, i.e. immediately on starting the engine the atmospheric temperature should be noted by means of a thermometer.

4. Start the engine and gradually increase the speed until the voltmeter needle " flicks " and then steadies (approx. 1,500 generator r.p.m.). This should occur at a voltmeter reading between the limits given below for the approximate temperature of the regulator unit.

Regulator Setting

Atmospheric Temperature	Volts	
	Current Type	*Previous Type*
50°F. (IO°C.)	15.7 to 16.1	15.9 to 16.5
68°F. (20°C.)	15.6 to 16	15.6 to 16.2
86°F. (30°C.)	15.5 to 15.9	15.3 to 15.9
104°F. (40°C.)	15.4 to 15.8	15 to 15.6

If the reading is not between these limits the regulator is in need of adjustment.

5. Increase the speed gradually to maximum speed when the voltmeter needle should not rise more than half a volt above the tabulated readings.

If the voltmeter reading continues to rise as the engine speed is increased, possibly swinging the needle right over, it is indicative that either the regulator points are not opening or there is a poor or no earth between the regulator and the body.

If the points are not opening, the regulator should be renewed, as it is probable that they are " welded " or shorted, or there is an open circuit in the shunt coil.

6. If the voltage at which the reading becomes steady occurs outside these limits the regulator must be adjusted.

Shut off the engine and remove!the regulator cover. Slacken the lock-nut of the regulator adjusting screw (see Fig. 6), and turn the screw in a clockwise direction to raise the setting or in an anti - clockwise direction to lower the setting. Turn the screw only a fraction of a turn at a time and then tighten the locknut. Again run up the engine and repeat as above until the correct setting is obtained.

Adiustment of regulator open-circuit voltage should be conipleted within 30 seconds, otherwise heating of the shunt winding will cause false settings to be made.

A generator run at high speed on open circuit will build up a high voltage. Therefore, when adjusting the regulator, increase engine speed slowly until the regulator operates, otherwise a false setting may be made.

7. Reconnect the wires to terminals "A" and "AI " or remove the insulation from the cut-out points.

Ampere Output Test

1. Connect a test ammeter in series with the lead "A" and terminal "A."

2. Speed up the engine and observe the changing rate. This will vary according to the state of charge of the battery.

To Clean the Regulator **Points** *(Current* Type)

These must be removed for cleaning, and this should be carried out as follows:—

1. Slacken the locknut securing the fixed contact and screw to its bracket. Unscrew and remove the fixed contact and screw.

2. Remove the two armature screws and locknuts (refer to Fig. 7) and detach the metal strip.

3. Move the fixed contact mounting over slightly, enabling the moving contact bracket to be lifted out. Take care not to lose the insulating strips positioned on either side of the fixed contact mounting strip.

4. Clean the contact points with a suitable cleaning fluid or carborundum paper operated in a circular movement. Carefully wipe away all traces of dirt or other foreign matter. Finally, wipe both points with methylated spirits (denatured alcohol).

5. Replace the points in the reverse sequence to that described above in paragraphs (1)to (3).

In the event of the regulator not functioning correctly after adjustment, re-examine the regulator contacts. Any pitting or dirt must be removed as a clean smooth surface is essential.

It is also possible that the control voltage will not be steady until the points have " bedded in " properly and the air gaps may require adjustment as described below.

To Clean the Regulator Points *(Precious Type)*

1. Remove the screws securing the plate carrying the fixed contact to render the regulator contact\ accessible for cleaning. (See " B " Fig. 6.)

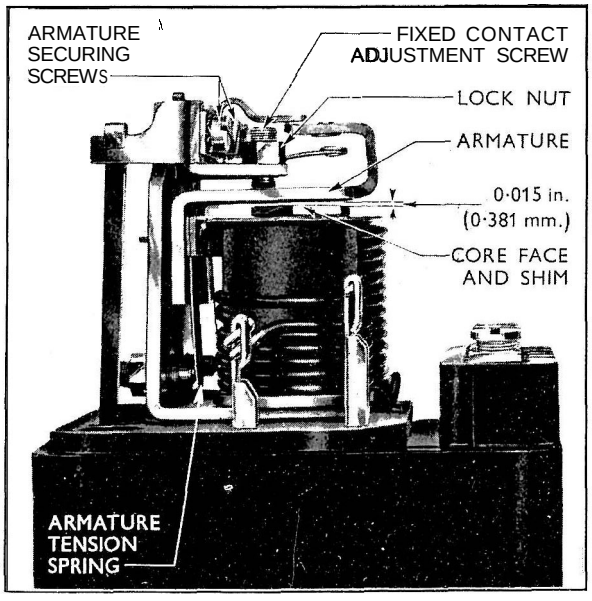

Fig. 7

Voltage Regulator Coils *(Current type)*

The plate was secured by two screws on early units of this type, but on later units the upper screw was replaced by a peg.

2. Remove the moving contact. (Two screws.)

3. Clean the contact points with carbon tetrachloride or carborundum paper operated in a circular movement. Carefully wipe away all traces of dirt or other foreign matter.

4. Wipe both points with alcohol, assemble the fixed contact and tighten the screw or screws securely and then replace the moving contact.

Resetting the Regulator Armature

The armature or moving contacts should not normally be removed, as the air gaps between the core and the frame are accurately set and are of great importance to the satisfactory operation of the regulator. If, for any reason, however, the armature has been removed or its setting altered, it should be reset as follows: —

Current Type Regulator

1. Disconnect the battery.

2. Slacken the fixed contact screw locknut and unscrew the contact screw until it is clear of the armature moving contact. (Refer to Fig. 7.)

3. Slacken the regulator adjusting screw locknut and unscrew the adjusting screw until it is completely clear of the armature tension spring.

4. Slacken the two armature assembly securing screws. Using a 0.015 in. (0.381 mm.) feeler blade, wide enough to cover the complete core face, insert the blade between the armature and core shim, taking care not to damage or burr the edge of the shim.

5. Press the armature **squarely** down against the blade and, holding it firmly, retighten the two armature assembly securing screws.

6. With the blade and armature still in the above position, screw the adjustable contact down until it just touches the armature contact. Re-tighten the locking nut.

7. Reset the regulator adjusting screw as described in " Testing and Adjusting the Regulator."

8. Reconnect the battery.

If the contact points are found to be badly worn, replace the regulator.

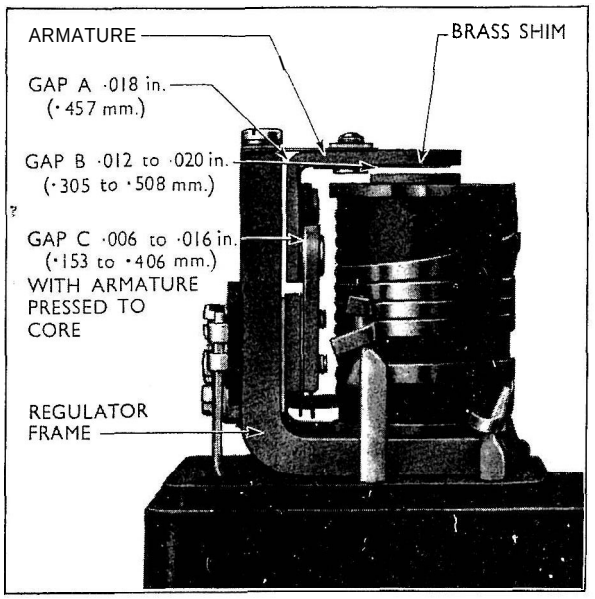

Fig. 8
Voltage Regulator Coils *(Previous Type)*

Previous Type Regulator

1. Slacken the two screws securing the armature to the regulator frame.

2. Insert an 0.018 in. (.457 mm.) feeler gauge between the armature and the frame (gap A, Fig. 8) and an 0.020 in. (.508 mm.) feeler gauge between the armature and the core of the bobbin (gap B, 0.012 in. to 0.020 in.). Press the armature firmly against both gauges and tighten the two screws securing the armature to the regulator frame.

3. Remove the gauges, press down the armature on to the core and check the gap C of the contact points.

This should be between 0.006 and 0.016 in. (.153 and .406 mm.) and may be adjusted either by increasing or decreasing the number of .005 in. (.127 mm.) thick shims located between the contacts and the packing plate. Do not allow the shims to "short" to the back frame.

4. Tighten the screws securing the fixed contact after making any shim adjustment and re-check the gap.

THE CUT-OUT

Examine the cut-out points and, if necessary, clean with carbon tetrachloride or carborundum paper. Ensure that the points are meeting correctly.

To Test and Adjust the Cut-out

1. Connect the voltmeter between the "D" terminal and a good earth, or the "E" terminal.

2. Speed up the engine slowly and note the voltage immediately before the points close.

This voltage should be 12.7 to 13.3 volts. The voltage may be adjusted by slackening the locknut and turning the cut-cut adjusting screw (see Fig. 6), in an anti-clockwise direction to decrease the voltage and vice versa. Turn the adjusting screw a little at a time, tighten the locknut and re-test as above.

Resetting the Cut-out Armature *(Current Type)*

It is suspected that the above setting is incorrect and the cut-out points setting has been disturbed, proceed as follows :—

1. Slacken the adjusting screw locknut and unscrew the cut-out adjusting screw until it is clear of the armature tension spring.

2. Slacken the two armature securing screws.

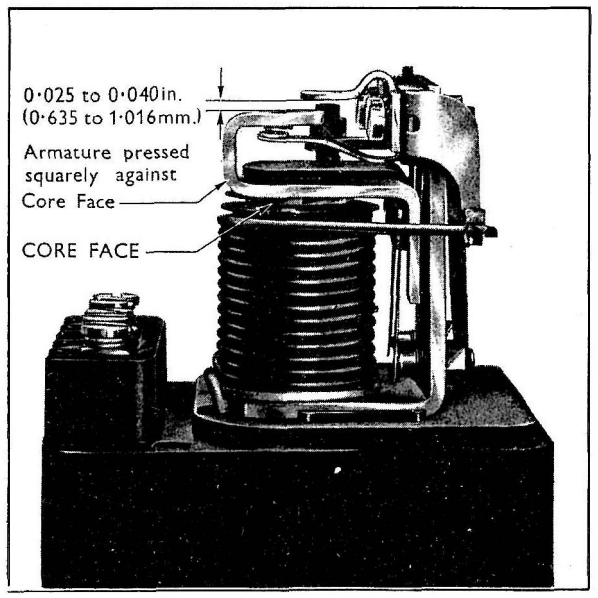

Fig. 9
Cut-out Points *(Current Type)*
(Setting Armature Stop Arm)

3. Press the armature down **squarely** against the copper-coated core face and, holding it there, retighten the armature securing screws.

3. Still holding the armature down against the core, bend the armature stop arm so that a gap of 0.025 to 0.040 in. (0.635 to 1.016 mm.) exists between it and the armature tongue (see Fig. 9).

5. Insert the end of a 0.010 to 0.020 in. (0.254 to 0.508 mm.) feeler blade between the outer end of the armature and core face, acd set the fixed contact, by bending the arm, so that the points are **just** touching (see Fig. 10).

6. Reset the cut-out adjusting screw as described in "To Test and Adjust the Cut-out."

Resetting the Cut-out Armature *(Previous Type)*

For general setting purposes, slacken off the cut-out adjusting screw (see Fig. 6) fully and the two screws on the regulator frame. Place a feeler in gap "A" (0.011 in. – 0.015 in. : .28 – .381 mm. and gap "C" (0.010 in. : .356 mm.). Refer to Fig. 11. Press the armature on both feeler gauges and tighten the two regulator frame screws.

Remove the feeler from gap "C" and with the feeler in gap "A" still in position, press down the armature and adjust gaps "B" and "D" (0.030 in. – 0.034 in. : .772 – .863 mm. and 0.002 in. – 0.006 in. : .051 – .152 mm. respectively). Remove the gauges and readjust the voltage as described in "To Test and Adjust the Cut-out".

Ensure that the points close before the armature touches the core of the bobbin.

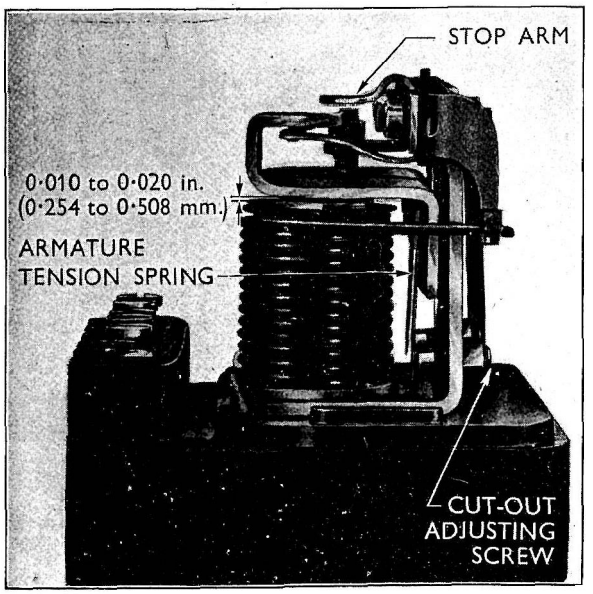

Fig. 10
Cut-out Point *(Current Type)*
(Setting the Fixed Contact)

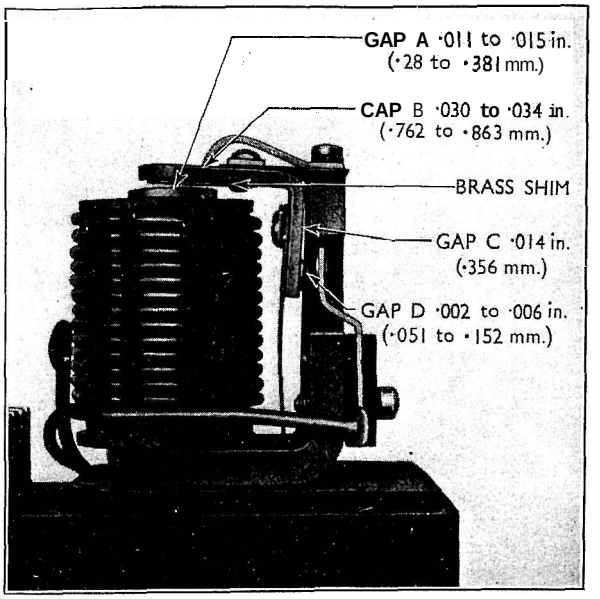

Fig. 11
Voltage Control Regulator Cut-out Coils
(Previous Type)

POWER MAJOR INSTRUMENT LAYOUT

With the introduction of the Power Major the ammeter and oil pressure gauge were deleted in favour of warning lights for generator charging and engine oil pressure. These lights are incorporated, together with a water temperature gauge, in a combined instrument situated in a new design of panel located directly below the steering wheel.

Changes were also made at this time to the main wiring loom which was re-routed from the right to the left-hand side of the engine.

To Replace a Warning Light Bulb

1. Remove the steering wheel and throttle control lever and extract the grease nipple from the top end of the steering column.

2. Remove the three screws retaining the instrument panel assembly to the steering column bracket.

3. Lift the panel assembly and release the two thumb screws retaining the temperature gauge and warning light assembly to the panel.

4. Draw the gauge upwards away from the panel and extract the warning lights and holders from the rear of the gauge.

5. Remove the bulbs and renew as necessary.

6. Reverse the dismantling procedure to effect replacement.